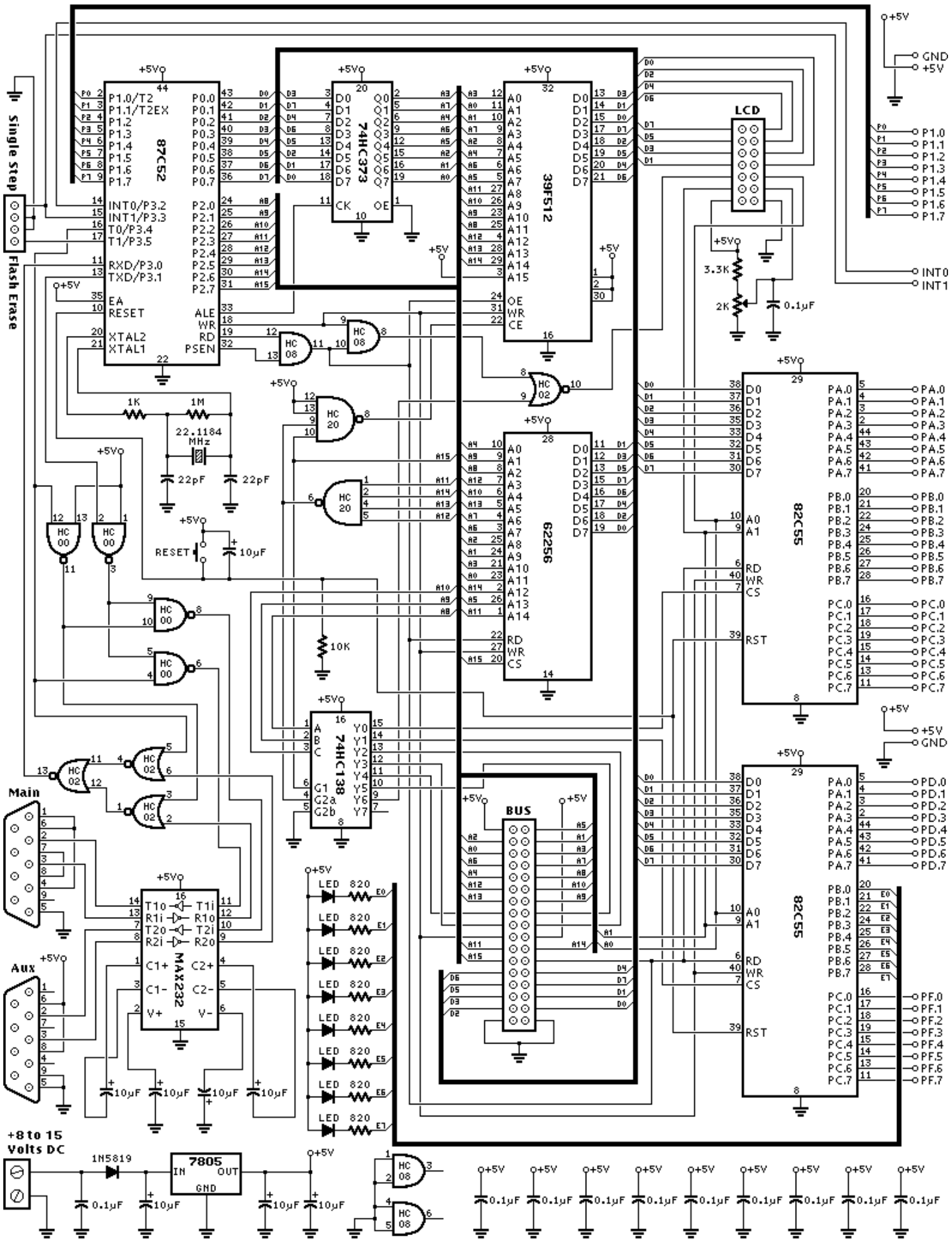8051 Development Board http://www.pjrc.com/tech/8051/board4/schematic.html